7. Exploded Views and Parts List

Contents

8.1	Main Assembly	p.7-2
8.2	Frame Assembly	p.7-4
8.3	Fuser Unit	p.7-6
8.4	Paper Path Assembly	p.7-8

Part Number & Description format.

Part numbers and descriptions are defined according to a company standard. The information below will help you to understand the part number format and assist when ordering spare parts.

- **There are two types of Part number format.**

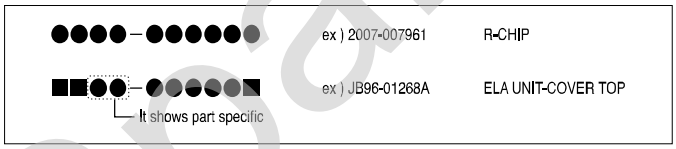

(● : number ■ : letter)

Type 1 : This format is used throughout Samsung on all product ranges.
Typically it is used for small components and electronic parts.

Type 2 : This format is controlled by individual Samsung Divisions and is used on specific products, typically for mechanical parts. Type 2 format part numbers fall into 2 categories:

- **A/S privately used part :** It is only used for A/S .
- **Ass'y part :** Assemblies consisting of 2 or more parts. Also used for Service manuals, user guides and diagrams.

- Ass'y parts and A/S privately used Parts can be distinguished by the part Code and Description. They are always Type 2 format. The 2 leading characters indicate private or assembly parts.

DIVISION	PART CODE	DESCRIPTION
A/S Private	**81-****** (JB81-00039A)	AS-********* (AS-USE)
ASS'Y Part	**75-****** (JB75-00068A)	MEC-******** (MEC-CHUTE)
ASS'Y Part	**92-****** (JB92-01131A)	PBA ********* (PBA MAIN-CONTROLLER)
ASS'Y Part	**97-****** (JB97-01089A)	MEA ********* (MEA UNIT-PULLEY IDLE)

IT-spares.eu

7.1 Main Assembly

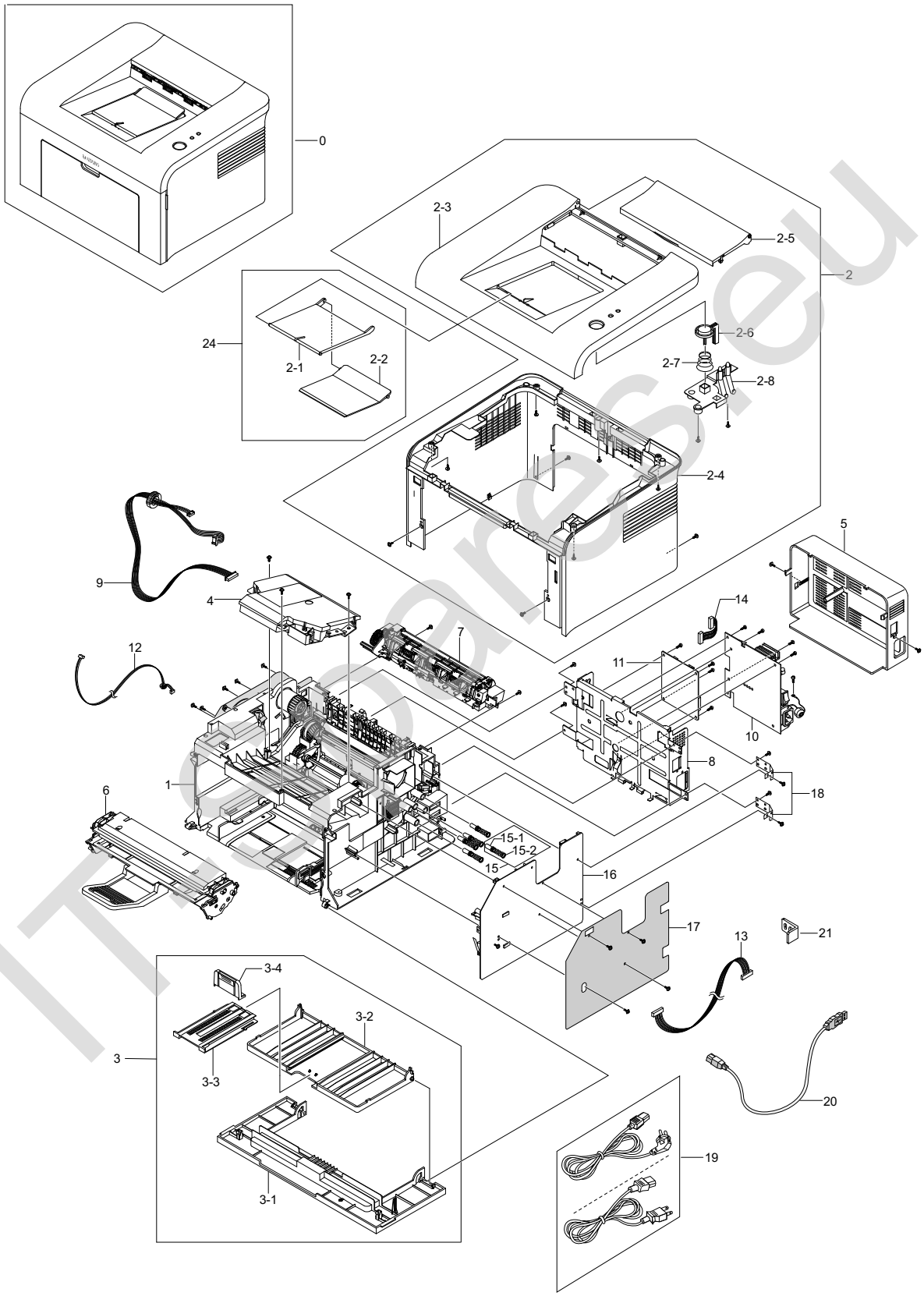

Main Assembly Parts List

SA : Service Available
O : Service available X : Service not available

No.	Location	SEC.Code	Description	Q'ty	SA	Remark
7.1-0	-	ML-1610	SET	1		
7.1-1	F2090	JC96-03349A	ELA UNIT-FRAME_LOWER;ML-1610,S	1	SA	
7.1-2	T4062	JC97-02177A	MEA UNIT-COVER MAIN;ML-1610,SA	1	SA	
7.1-2-1	Z5090	JC61-01155A	GUIDE-M-STACKER_RX;ML-1610,HIP	1	SA	
7.1-2-2	Z5092	JC61-01156A	GUIDE-M-SUB STACKER;ML-1610,HI	1	SA	
7.1-2-3	Z2168	JC63-00618A	COVER-M_TOP;ML-1610,HIPS,2.3,2	1	SNA	
7.1-2-4	Z2198	JC63-00619A	COVER-M-MAIN;ML-1610,HIPS,2,25	1	SNA	
7.1-2-5	D0027	JC63-00620A	COVER-M-JAM;ML-1610,HIPS,2,78,	1	SA	
7.1-2-6	K0045	JC64-00184A	KEY-M-ONLINE;ML-1610,ABS,L29*H	1	SNA	
7.1-2-7	A1013	JC66-00816A	LEVER-M-ACTUATOR JAM;ML-1610,P	1	SA	
7.1-2-8	W3274	JC67-00079A	LENS-M_LED;ML-1610,PMMA,TRANSP	1	SNA	
7.1-3	Z2409	JC97-02176A	MEA UNIT-COVER FRONT;ML-1610,S	1	SA	
7.1-3-1	Z2146	JC63-00616A	COVER-M_FRONT(DEVE);ML-1610,HI	1	SNA	
7.1-3-2	K3955	JC63-00617A	TRAY-M-CASSETTE;ML-1610,HIPS,2	1	SNA	
7.1-3-3	E5013	JC63-00628A	TRAY-M-EXTENSION LARGE;ML-1610	1	SNA	
7.1-3-4	E5014	JC63-00629A	TRAY-M-EXTENSION SMALL;ML-1610	1	SNA	
7.1-4	L7012	JC59-00023A	UNIT-LSU;ML-1610,-,-,16,20PPM,	1	SNA	
7.1-5	S7009	JC63-00621A	COVER-M-SMPS;ML-1610,ABS,2,156	1	SA	
7.1-6	T2060	JC96-03352B	ELA UNIT-DEVE INITIAL,1K	1	SNA	Europe
7.1-6	T2060	ML-1610D2	ELA UNIT-DEVE SALES,2K	1	SNA	Korea
7.1-6	T2060	ML-1610D2/SEE	ELA UNIT-DEVE SALES,2K	1	SNA	Korea
7.1-6	T2060	ML-1610D2/XIL	ELA UNIT-DEVE SALES,2K	1	SNA	China
7.1-7	F4038	JC96-03401A	ELA HOU-FUSER 220V;ML-1610,SAM	1	SA	Europe
7.1-7	F4038	JC96-03400A	ELA HOU-FUSER 110V;ML-1610,SAM	1	SA	USA
7.1-8	E2108	JC63-00632A	SHIELD-P-ENGINE;ML-1610,SECC,T	1	SNA	
7.1-9	L7002	JC39-00406A	CBF HARNESS-LSU;ML-1610,#26,UL	1	SA	
7.1-10	S7050	JC44-00081A	SMPS-(V2C),220V;ML-1610,*,AC/DC,-,2	1	SA	Europe
7.1-10	S7050	JC44-00080A	SMPS-(V1),110V	1	SA	USA
7.1-11	Z1024	JC92-01640A	PBA MAIN-USB_ONLY;ML-1400,SEC,	1	SA	
7.1-12	M2053	JC39-00405A	CBF HARNESS-MOTOR;ML-1610,CBF	1	SA	
7.1-13	H1098	JC39-00400A	CBF HARNESS-HVPS;ML-1610,WIRE	1	SA	
7.1-14	H1247	JC39-00402A	CBF HARNESS-SMPS;ML-1610,WIRE	1	SA	
7.1-15	K3197	JC96-01672A	ELA UNIT-TERMINAL TR L;ML-6060	5	SNA	
7.1-15-1	Z4197	JC61-00031A	SPRING ETC	1	SA	
7.1-15-2	S4027	JC70-40912A	ICT-SHAFT HV LARGE;ML-5000A,SW	1	SA	
7.1-16	S7027	JC44-00079A	HVPS-SKYLARK;-,24V,21.6V~27.6V	1	SA	
7.1-17	D2132	JC63-00722A	SHEET-HVPS;ML-1610,PP PP,T0.25	1	SA	
7.1-18	K3232	JC63-00631A	GROUND-P-HVPS;ML-1610,SUS304CS	2	SNA	
7.1-19	Z6060	3903-000042	CBF-POWER CORD;DT,EU,FP3/YES,I	1	SA	Europe
7.1-19	Z6060	3903-000085	CBF-POWER CORD;DT,US,BPS/YES,I	1	SA	USA
7.1-20	C0034	JB39-10501A	CBF IF-USB(WITH CORE)	1	SA	Korea
7.1-21	P5151	JC61-01170A	PLATE-P-CHANNEL;ML-1610,SECC,1	1	SA	
7.1-22						

Hesaprint.eu

7.2 Frame Assembly

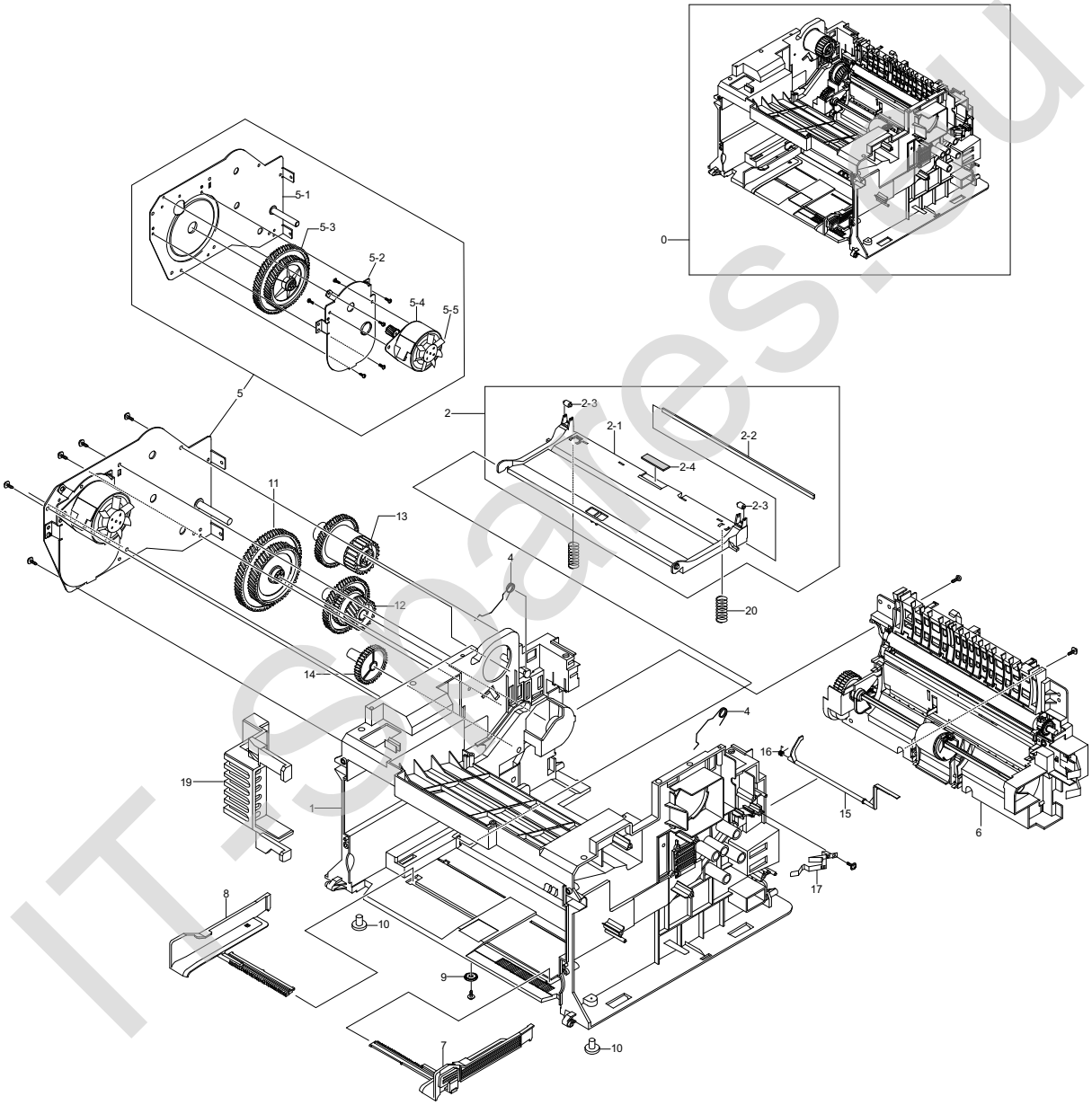

IT-schemes.ru

Frame Assembly parts List

SA : Service Available
O : Service available X : Service not available

No.	Location	SEC.Code	Description	Q'ty	SA	Remark
7.2-0	F2090	JC96-03349A	ELA UNIT-FRAME_LOWER;ML-1610,S	1	SA	
7.2-1	B0080	JC61-01152A	FRAME-M-BASE;ML-1610,ABS(VE-08	1	SNA	
7.2-2	K3602	JC97-02218A	MEA UNIT-PLATE KNOCK_UP;ML-161	1	SA	
7.2-2-1	K5002	JC61-01158A	PLATE-M-KNOCK_UP;ML-1610,HIPS	1	SA	
7.2-2-2	P2158	JC66-00720A	SHAFT-P-CORE;ML-1750,SECC 1.2T	1	SNA	
7.2-2-3	K5006	JC72-01004A	PMO-IDLE KNOCK UP MP;ML-2150,P	2	SNA	
7.2-2-4	K5007	JC74-00011A	MPR-PAD KNOCK UP MP;ML-6060A,C	1	SNA	
7.2-3	Z4271	JC61-01258A	SPRING ETC-TORSION DEVE_L;ML-1	1	SA	
7.2-4	Z4272	JC61-01259A	SPRING ETC-TORSION DEVE_R;ML-1	1	SA	
7.2-5	D4030	JC96-03518A	ELA UNIT-RX DRIVE;ML-1610,SAMS	1	SA	
7.2-5-1	B4025	JC61-01153A	BRACKET-P-GEAR;ML-1610,SECC,T1	1	SNA	
7.2-5-2	M2048	JC61-01154A	BRACKET-P-MOTOR;ML-1610,SECC,T	1	SNA	
7.2-5-3	G0383	JC66-00804A	GEAR-RDCN 139/83;ML-1610,POM,0	1	SA	
7.2-5-4	P2119	JC31-00020D	MOTOR BLOWER-STEP 7.5;M49SP-2K	1	SA	
7.2-5-5	K4023	JC72-00825A	PMO-IMPELLER_DRV;ML-6200,NYLON	1	SA	
7.2-6	B0101	JC97-02175A	MEA UNIT-FRAME PAPER PATH;ML-1	1	SA	
7.2-7	K2015	JC70-00500A	ADJUST-M-CASSETTE_R;ML-1610,AB	1	SA	
7.2-8	K2014	JC70-00499A	ADJUST-M-CASSETTE_L;ML-1610,AB	1	SA	
7.2-9	G0369	JG66-40003A	GEAR-PINION;SF4000,POM,WHT,M1,	1	SA	
7.2-10	F1011	JC61-00836A	FOOT-FRONT;ML-1750,NBR,D7,-,12	2	SA	
7.2-11	G0381	JC66-00805A	GEAR-RDCN 113/83;ML-1610,POM,0	1	SA	
7.2-12	D4047	JC66-00806A	GEAR-OPC DR 76/38/29;ML-1610,P	1	SA	
7.2-13	F4086	JC66-00807A	GEAR-FUSER DR 63/35;ML-1610,PO	1	SA	
7.2-14	F6076	JC66-00808A	GEAR-FEED DR 41;ML-1610,POM,0.	1	SA	
7.2-15	K3816	JC66-00822A	LEVER-M-ACTUATOR_EMPTY;ML-1610	1	SNA	
7.2-16	Z4274	JB61-00076A	SPRING ETC-TORSION DOC (CC2-F)	1		
7.2-17	D4053	JC63-00622A	GROUND-P-OPC;ML-1610,SUS304CSP	1	SA	
7.2-18	D4084	6107-001240	SPRING-CS;SUS304-WPB,GROUND EN	2	SNA	
7.2-19	A0003	JC67-00110A	CAP-M-MOTOR;ML-1610,HIPS ,2.0,	1	SNA	
7.2-20	B2030	JC61-00025A	SPRING ETC-CS-CHARGE	2		

ITschemas.eu

7.3 Fuser Unit

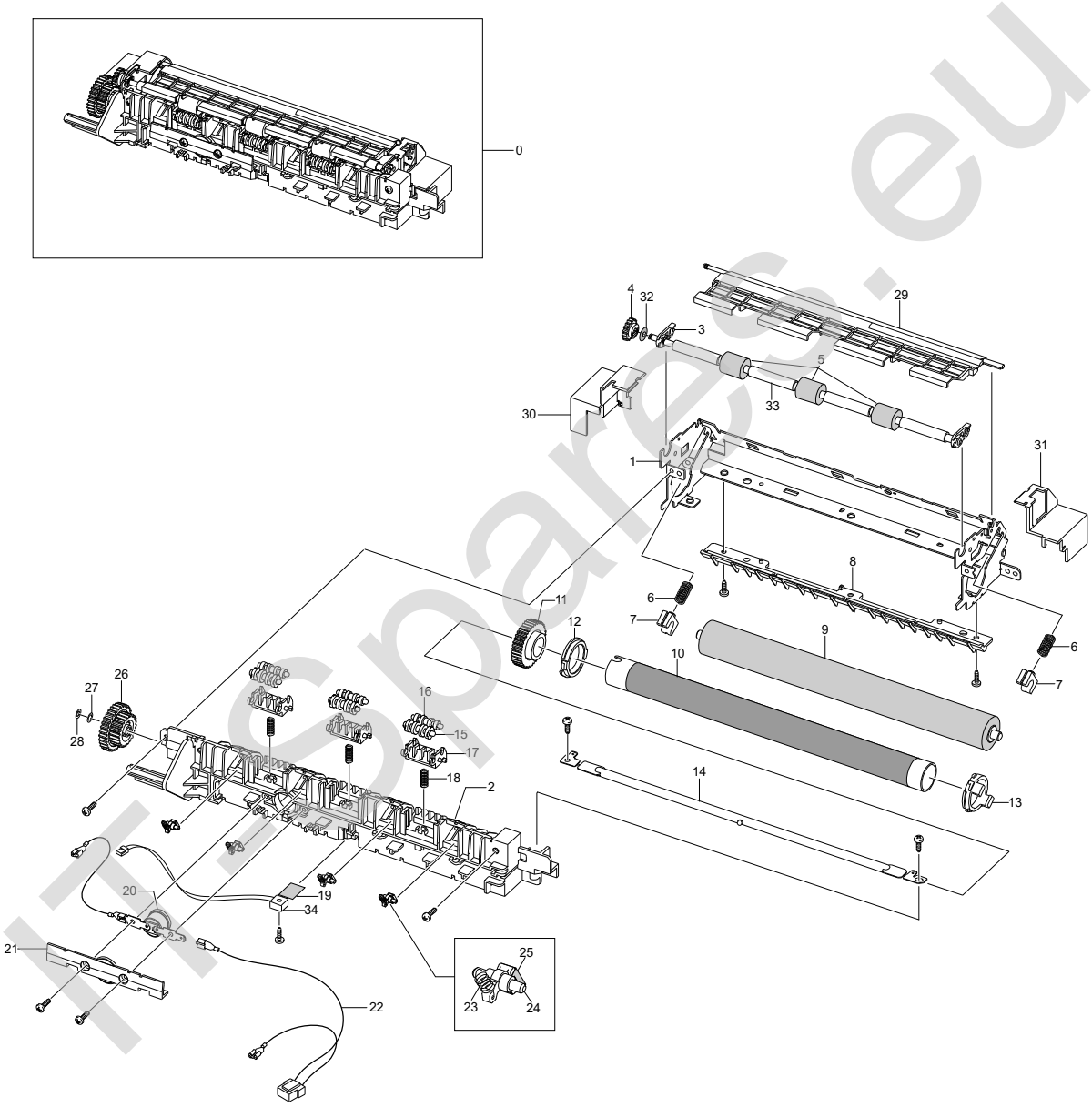

ITSpares.eu

Fuser Unit Parts List

SA : Service Available
O : Service available X : Service not available

No.	Location	SEC.Code	Description	Q'ty	SA	Remark
7.3-0	F4038	JC96-03401A	ELA HOU-FUSER 220V;ML-1610,SAM	1	SA	Europe
7.3-0	F4038	JC96-03400A	ELA HOU-FUSER 110V;ML-1610,SAM	1	SA	USA
7.3-1	F2122	JC61-01162A	FRAME-P-FUSER;ML-1610,SECC ,-,	1	SNA	
7.3-2	Z2149	JC63-00615A	COVER-M_FUSER;ML-1610,PET+GF30	1	SNA	
7.3-3	H4027	JC61-01177A	HOLDER-M-EXIT R;ML-1610,PC,1.5	2	SA	
7.3-4	E4038	JC66-00810A	GEAR-EXIT_DRV17;ML-1610,POM,0.	1	SNA	
7.3-5	H4026	JC61-01172A	HOLDER-M-EXIT F/DOWN;ML-1610,P	3	SNA	
7.3-6	D4085	6107-001168	SPRING-CS;PW-2,-,PI0.95,D5.95,	2	SNA	
7.3-7	P6004	JC66-10901A	BEARING-PRESSURE/R;ML-165,PPS(	2	SNA	
7.3-8	K3960	JC61-00595A	GUIDE-M-INPUT;ML-1710,PET+GF30	1	SNA	
7.3-9	P6014	JC66-00600A	ROLLER-PRESSURE;ML-1710,SUM24L	1	SNA	
7.3-10	H2006	JC66-00601A	ROLLER-HEAT;ML-1710,AL 5052+PF	1	SNA	
7.3-11	F4094	JC66-00564A	GEAR-FUSER,Z37;ML-1710,PPS OF	1	SA	
7.3-12	K2879	JC61-00589A	BUSH-M-HR L;ML-1710,PPS(RBA313	1		
7.3-13	K2880	JC61-00590A	BUSH-M-HR R;ML-1710,PPS RBA313	1	SA	
7.3-14	K2297	4713-001202	LAMP-HALOGEN;230V,-,600W,-,-,-	1	SA	Europe
7.3-14	K2297	4713-001203	LAMP-HALOGEN;115V,-,600W,-,-,-	1	SA	USA
7.3-15	R1083	JC66-00824A	ROLLER-M-EXIT MAIN;ML-1610,POM	3	SNA	
7.3-16	R1084	JC66-00830A	ROLLER-M-EXIT FR;ML-1610,POM,6	3	SNA	
7.3-17	D4085	6107-001168	SPRING-CS;PW-2,-,PI0.95,D5.95,	2	SNA	
7.3-18	D4086	6107-001163	SPRING-CS;SUS304-WPB,-,PI0.4,D	3	SNA	
7.3-19	K2752	1404-001298	THERMISTOR-NTC;7KOHM,-,3370K,0	1	SNA	
7.3-20	K4279	JC47-00005B	THERMOSTAT-150;ML-1610,-,125/2	1	SA	
7.3-21	H1089	JC39-00404A	CBF HARNESS-FUSER JOINT;ML-161	1	SA	
7.3-22	H1085	JC39-00403B	CBF HARNESS-FUSER(220V);ML-1610	1	SNA	Europe
7.3-22	H1085	JC39-00403A	CBF HARNESS-FUSER(110V);ML-1610	1 S	NA	USA
7.3-23	B2031	JC61-00064A	SPRING ETC-CLAW;ML-5200A,SUS 3	4	SNA	
7.3-24	H4031	JC61-00584A	HOLDER-M-PLATE CLAW;ML-1710,PP	4	SA	
7.3-25	H4032	JC61-00605A	PLATE-P-CLAW;ML-1710,SUS304-CS	4	SNA	
7.3-26	E4039	JC66-00801A	GEAR-EXIT_DR38/25;ML-1610,POM,	1	SNA	
7.3-27	S2004	6031-001051	WASHER-PLAIN;M4,ID4.1,OD7.0,T0	1	SNA	
7.3-28	D4087	6107-001163	SPRING-CS;SUS304-WPB,-,PI0.4,D	3	SNA	
7.3-29	Z2194	JC63-00637A	COVER-M-FUSER-DUMMY;ML-1610,PE	1	SNA	
7.3-30	L1014	JC63-00639A	COVER-M-LAMP-L;ML-1610,PET+GF3	1	SNA	
7.3-31	L1015	JC63-00638A	COVER-M-LAMP-R;ML-1610,PET+GF3	1	SNA	
7.3-32	D4088	6044-000001	RING-CS;ID3,OD3,T0.25,BLACK,SU	1	SNA	
7.3-33	E4159	JC66-00826A	ROLLER-EXIT F/DOWN;ML-1610,SUM	1	SA	
7.3-34	H4087	JC67-00085A	CAP-M-THERMO;ML-1610,PET+GF30%	1	SNA	

ITSRepairs.eu

7.4 Paper Path Unit

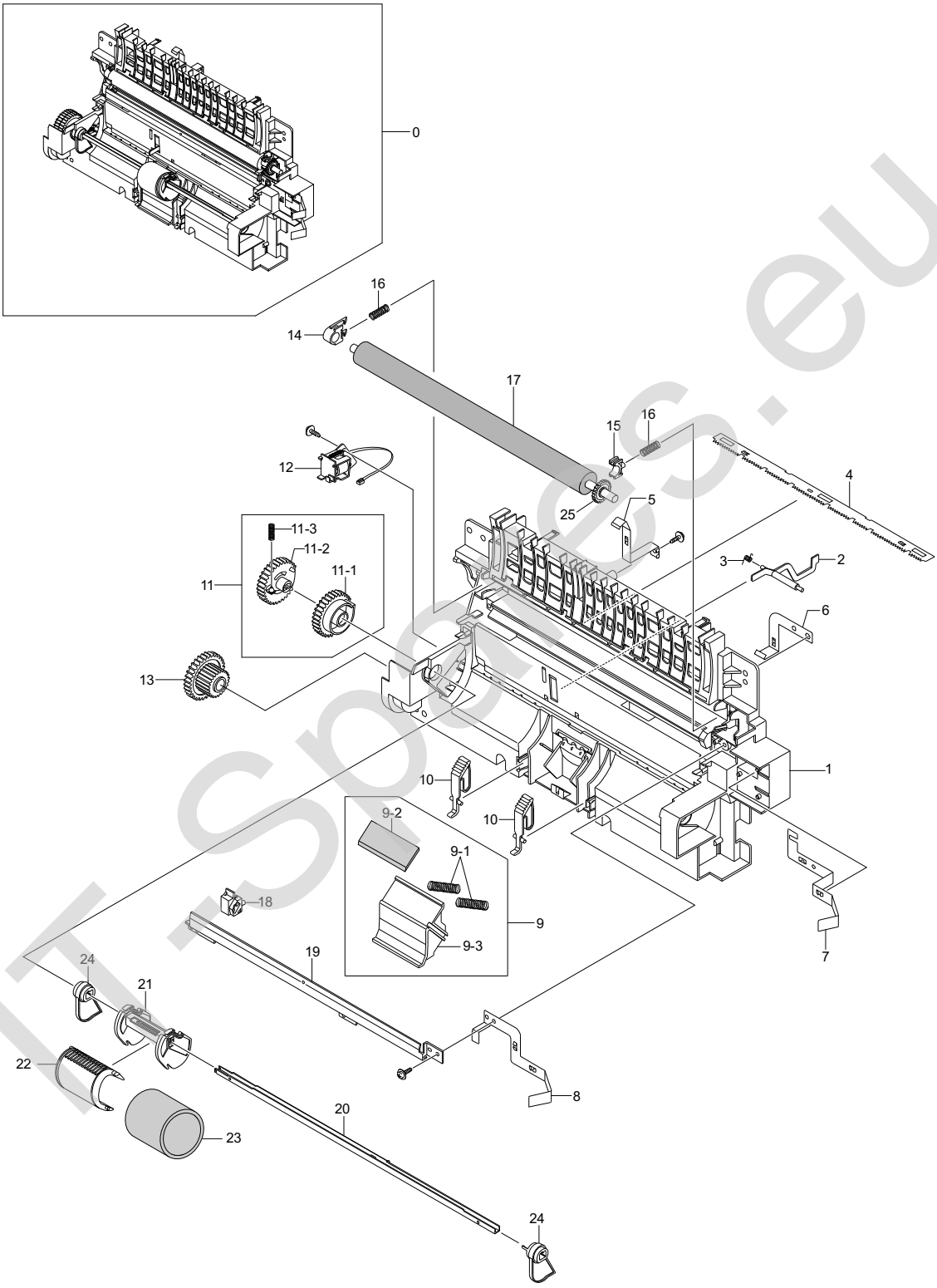

IT-Spares.eu

Paper path Unit Parts List

SA : Service Available
O : Service available X : Service not available

No.	Location	SEC.Code	Description	Q'ty	SA	Remark
7.4-0	B0101	JC97-02175A	MEA UNIT-FRAME PAPER PATH;ML-1	1	SA	
7.4-1	G2069	JC61-01161A	GUIDE-M-PAPER PATH;ML-1610,ABS	1	SA	
7.4-2	E7006	JC66-00814A	LEVER-ACTUATOR FEED SENSOR;ML-	1	SA	
7.4-3	Z4209	JB61-00107A	SPRING ETC-LEVER SENSOR;SF-430	1	SA	
7.4-4	K3376	JC70-10232A	IPR-PLATE SAW;ML-80,SUS304 CSP	1	SNA	
7.4-5	W3076	JC63-00625A	GROUND-P-VARISTOR;ML-1610,SUS3	1	SNA	
7.4-6	W3077	JC63-00624A	GROUND-P-ZENER;ML-1610,SUS304C	1	SNA	
7.4-7	W3078	JC63-00623A	GROUND-P-THV;ML-1610,SUS304CSP	1	SNA	
7.4-8	W3079	JC63-00626A	GROUND-P-SAW;ML-1610,C5210P,0.	1	SNA	
7.4-9	P0015	JC97-02217A	MEA UNIT-HOLDER_PAD;ML-1610,SA	1	SA	
7.4-9-1	P2165	JC61-70911A	SPRING ETC-EXIT ROLL FD;ML-165	2	SNA	
7.4-9-2	R1049	JC69-00846A	PAD-FRICTION;ML-1610,NBB,1,5,3	1	SNA	
7.4-9-3	H4029	JC61-01169A	HOLDER-M-PAD;ML-1610,PC,1.7,39	1	SA	
7.4-10	R1120	JC66-00815A	LEVER-M-KICKER P/U;ML-1610,POM	2	SNA	
7.4-11	P2093	JC97-02179A	MEA UNIT-PICK UP GEAR;ML-1610,	1	SA	
7.4-11-1	P2056	JC66-00803A	GEAR-PICK_UP B;ML-1610,POM,0.8	1	SA	
7.4-11-2	P2057	JC66-00802A	GEAR-PICK_UP A;ML-1610,POM,0.8	1	SA	
7.4-11-3	D4089	6107-001167	SPRING-CS;SUS304-WPB,-,PI0.25,	1	SNA	
7.4-12	S8014	JC33-00015B	SOLENOID-MP_R2;-,SCX-4720F,DC2	1	SNA	
7.4-13	F6071	JC66-00809A	GEAR-FEED 35/19;ML-1610,POM,0.	1	SA	
7.4-14	K2886	JC61-00588A	BUSH-M-TR L;ML-1710,POM(M90-44	1	SNA	
7.4-15	K3856	JC72-00102A	PMO-BUSHING_TR(L);SF-5100,POM	1	SA	
7.4-16	Z4277	JC61-70940A	SPRING ETC-TR(12);ML-5500,-,4.	2	SA	
7.4-17	T3013	JC66-00725A	ROLLER-TRANSFER;SCX-4100,NBR F	1	SA	
7.4-18	H4041	JC61-00583A	HOLDER-PTL;ML-1710,PC,-,-,-,BL	1	SNA	
7.4-19	K3367	JC70-00307A	IPR-P-EARTH TRANSFER;ML-1710,S	1	SA	
7.4-20	P2160	JC66-00829A	SHAFT-P-PICK_UP;ML-1610,SECC,2	1	SNA	
7.4-21	P2067	JC61-01151A	HOUSING-M-PICK_U;ML-1610,POM,-	1	SNA	
7.4-22	P2068	JC61-01173A	HOUSING-M-PICK_UP B;ML-1610,AB	1	SNA	
7.4-23	P2148	JC73-00211A	RUBBER-PICK_UP;ML-1610,EPDM+IR	1	SA	
7.4-24	P2042	JC66-00811A	CAM-M-PICK_UP;ML-1610,POM,4,W2	2	SNA	
7.4-25	G0448	JC66-00813A	GEAR-TRANSFER;ML-1610,POM,0.6,	1	SA	

ITshopes.eu